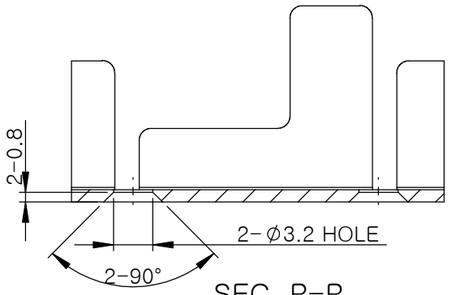

SEC. P-P

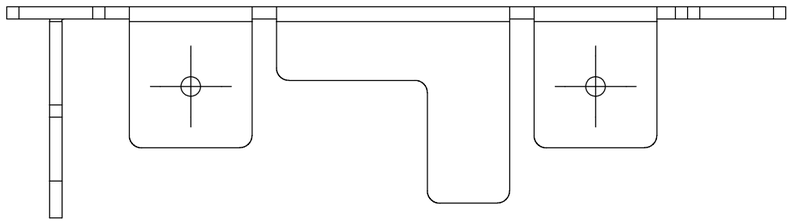

BURR DIRECTION

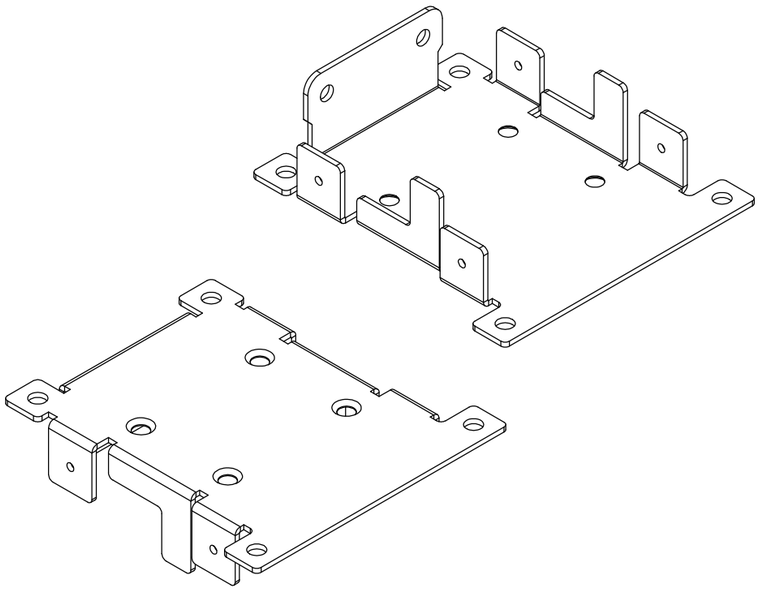

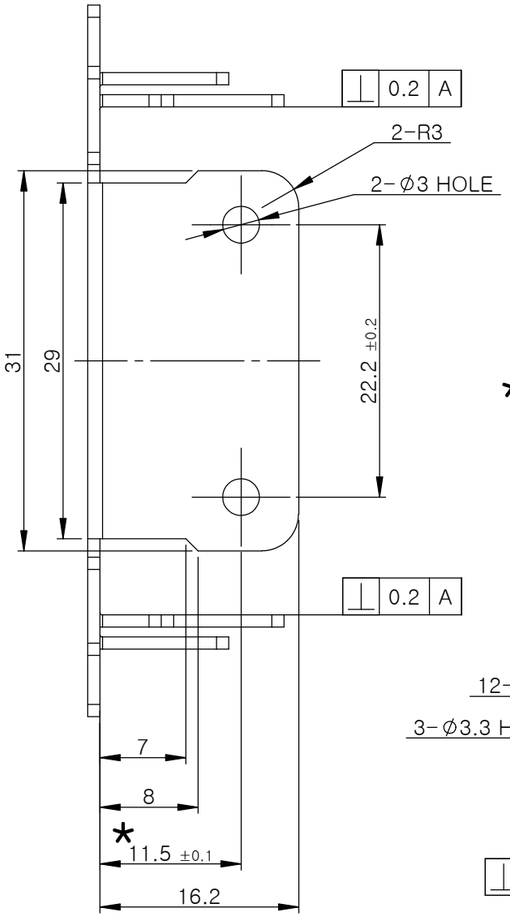

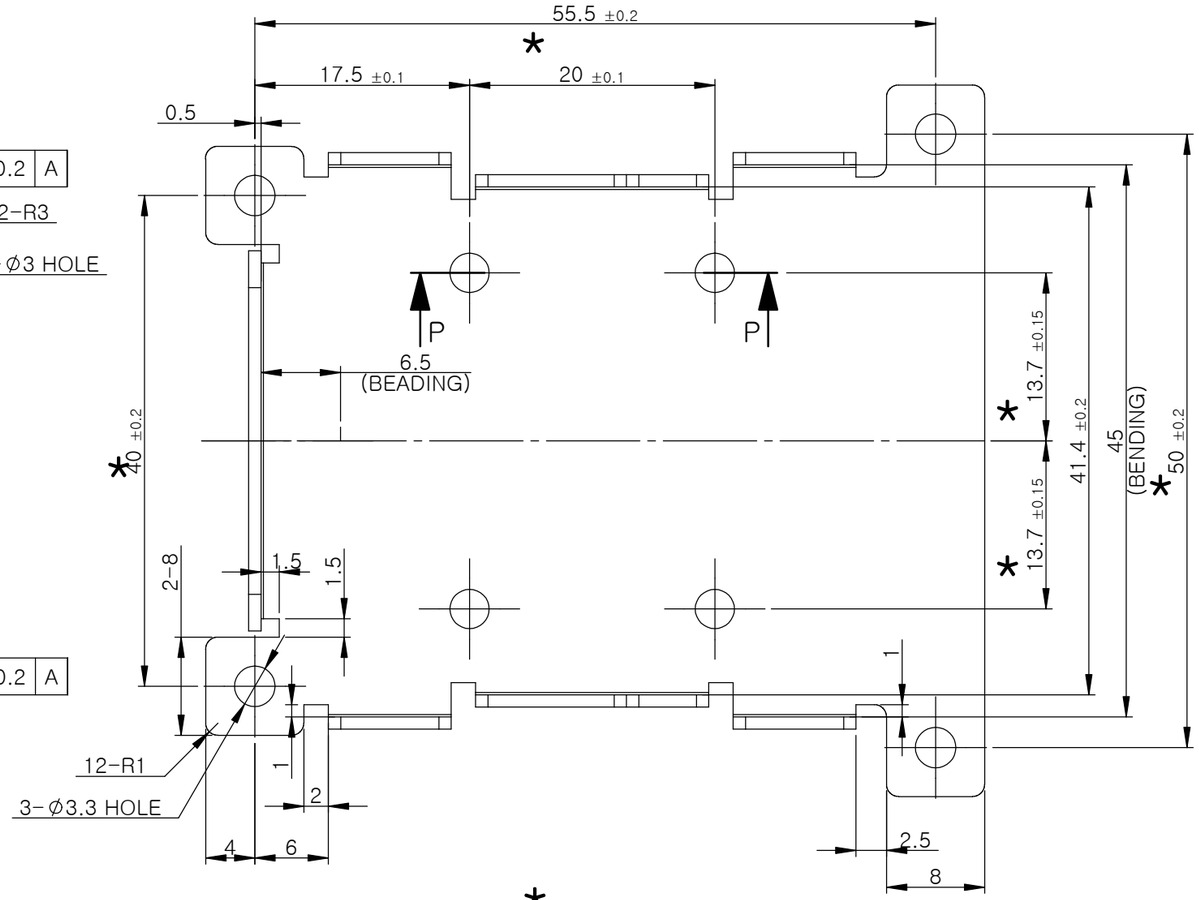

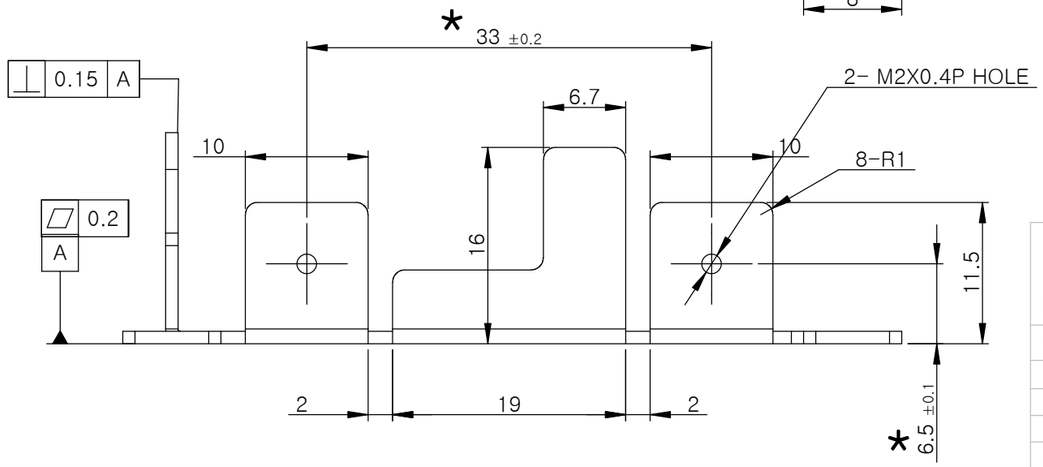

NOTE :

1. UNLESS OTHERWISE SPECIFIED, GENERAL TOLERANCES ARE:
   0 - 20mm : ± 0.1
   21 -50mm : ± 0.2
   51 -100mm : ± 0.3
   101 -150mm : ± 0.4
2. * INDICATES CONTROL DIMENSIONS.
3. THIS PART HAS SYMMETRICAL STRUCTURE.
4. BURRS SHALL NOT EXCEED 0.05mm.
   ALL BURRS THAT MAY RESULT IN INJURY SHALL BE REMOVED.
5. UNSPECIFIED CORNER RADIUS TO BE R0.5 MAX.
6. UNSPECIFIED INSIDE BENDING RADIUS TO BE R0.2
7. ALL BENDING DIMENSION TO MEASURE AT THE TANGENT POINT OF THE BENDS.
8. MATERIAL USED AND PARTS PRODUCED MUST COMPLY ROHS REQUIREMENT.
9. SURFACE TO BE FREE FROM SCRATCHES, DIRT AND OIL.

MATERIAL: SUS304 T=1.0				• DO NOT SCALE DRAWING. • IF IN DOUBT, ASK. • ALL DIMENSIONS IN mm.	IR ROBOT
PROCESS: NA					(Private and Confidential) Copyright ©2013
COLOUR: NATURAL					PART NAME : BRACKET LOWER IR-MB05
	NAME	SIGNATURE	DATE	VOLUME [mm³] :	
DRAWN	YC KIM		2024.08.26		PART NO : IRMIS0011 / REV NO: 01
CHK'D				WEIGHT [gf] :	
APPV'D					SCALE 2:1 / SHEET 2 OF 2 / A3